Bain-Marie AUTOMATIC SRV

With automatic level control

- **Fully automatic filling with water and automatic level control**
  Safe operation with maximum heat transfer for food by automatically controlled water level.
- **Easier connection,**
  there is no overflow to be connected separately.
- **Easy installation behind counter panels,**
  because a tap extension for the drain valve is not necessary.
- **Easier cleaning and decalcification,**
  because the water inlet valve and water level senor are located above the water level.
- **Water level sensor less sensitive**
  to cacification (removal of the calcific deposits rarely necessary).

Unsusceptible water level sensor

The water level is measured by a sensor finger made of solid stainless steel for automatic water filling and level control.
The sensor finger dips down into the water from above and is due to the large surface area considerably less sensitive to calcification and impurities than conventional solutions.

- **Robust construction,**
  because water inlet and outlet are welded seamlessly (no seals, no wearing parts).
- **No shut-off valve in the drain,**
  that means "jamming" with leftovers is not possible.
- **Safe heating technology**
  This is thanks to heating elements spread out under the pan bottom. Each heating element comes with an overheating fuse.

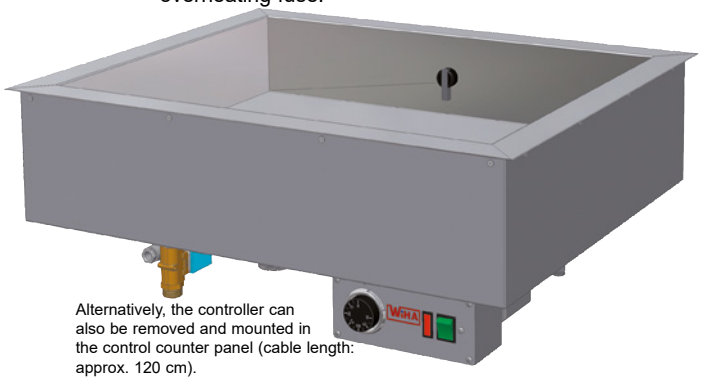

Alternatively, the controller can also be removed and mounted in the control counter panel (cable length: approx. 120 cm).

WIHA Bain-Marie AUTOMATIC SRV

Model	Dimensions (Width – Depth)	Effective Height 100 External Height 185 mm Art.-No.	Effective Height 150 External Height 235 mm Art.-No.	Effective Height 200 External Height 285 mm Art.-No.	Connection
Bain-Marie AUTOMATIC SRV GN 1/1	W 407 mm, D 610 mm	5450	5454	5458	230V/0.85kW
Bain-Marie AUTOMATIC SRV GN 2/1	W 732 mm, D 610 mm	5451	5455	5459	230V/1.70kW
Bain-Marie AUTOMATIC SRV GN 3/1	W 1057 mm, D 610 mm	5452	5456	5460	230V/2.55kW
Bain-Marie AUTOMATIC SRV GN 4/1	W 1382 mm, D 610 mm	5453	5457	5461	230V/3.40kW
Bain-Marie AUTOMATIC SRV GN 1 x 2/1	W 612 mm, D 730 mm	----	5523	5524	230V/1.70kW
Bain-Marie AUTOMATIC SRV GN 2 x 2/1	W 1142 mm, D 730 mm	----	5525	5526	230V/3.40kW
Bain-Marie AUTOMATIC SRV GN 2/1 L	W 1142 mm, D 405 mm	----	5527	5528	230V/1.70kW
Bain-Marie AUTO. SRV GN 1 x (1/1+1/3)	W 407 mm, D 786 mm	5543	5529	5531	230V/1.15kW
Bain-Marie AUTO. SRV GN 2 x (1/1+1/3)	W 732 mm, D 786 mm	5544	5532	5533	230V/2.30kW
Bain-Marie AUTO. SRV GN 3 x (1/1+1/3)	W 1057 mm, D 786 mm	5545	5534	5535	230V/3.45kW
Bain-Marie AUTO. SRV GN 4 x (1/1+1/3)	W 1382 mm, D 786 mm	----	5546	5547	400V/4.6kW *
Bain-Marie AUTO. SRV GN 1 x (1/1+1/2)	W 407 mm, D 875 mm	5548	5536	5537	230V/1.15kW
Bain-Marie AUTO. SRV GN 2 x (1/1+1/2)	W 732 mm, D 875 mm	5549	5538	5539	230V/2.30kW
Bain-Marie AUTO. SRV GN 3 x (1/1+1/2)	W 1057 mm, D 875 mm	5550	5540	5541	230V/3.45kW

* For the 400 V version are required: 2 Ph, N, PE

Special Accessories

	Art.-No.
Divider bar GN 1/1 lengthwise, width 530 mm, standard design	1025
Divider bar GN 1/1 lengthwise, width 530 mm, with clamping spring	8108
Divider bar GN 1/1 lengthwise, width 530 mm, with clamping spring and perforation	8109
Divider bar GN 1/1 crosswise, width approx. 325 mm	3010

Tip: For suitable GN container see page 397.

Errors and technical modification excepted. All prices are in Euro exclusive the statutory VAT. (status 05/2021)

Design

Bain-Marie for Gastro-Norm containers that are 100 mm, 150 mm or 200 mm deep.
This Bain-Marie comes complete with automatic filling and automatic level control.
Double-wall design with integrated thermal insulation.
Inner pan, drain, water intake and lateral outer surfaces are made of stainless steel, material 1.4301. Tank has a smooth bottom area and slope towards the drain channel.
Heating element under the base is spread over a large area. Each heating element comes with an overheat thermostat. Drain fitting 1 1/4“ (external thread) with standpipe valve.
Water is connected via a 3/4" (external thread) connector.
Inner pan is fully welded, mounting lip with ground surface.
The thermostat is encased in an installation housing that’s easy to maintain and can also be mounted in a counter panel (cable length: approx. 120 cm).
The level is controlled with a measurement of the water’s conductance and should be adjusted on-site to the local water conductance.
The temperature adjustment range is about 30°C to 90°C.
Delivery includes water-connection hose 1.5 m; 3/4" for connection to an on-site connection tap.

More drawings are available on www.wiha-web.com under “Info Centre / Customer Area”.

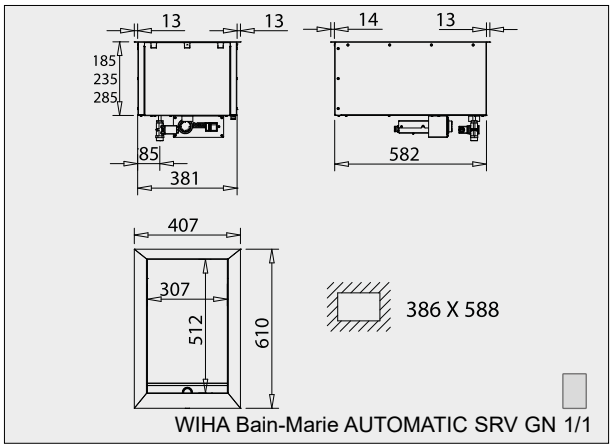

WIHA Bain-Marie AUTOMATIC SRV GN 1/1

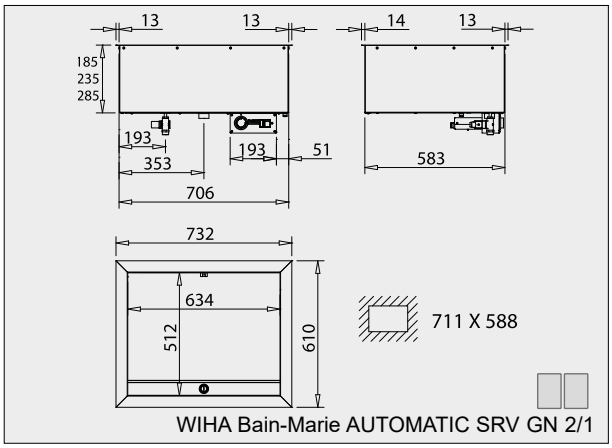

WIHA Bain-Marie AUTOMATIC SRV GN 2/1

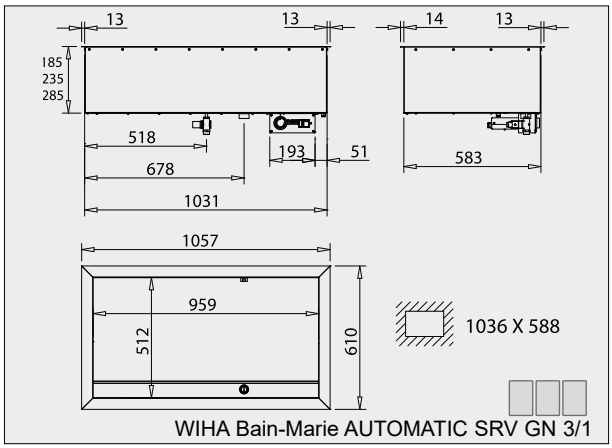

WIHA Bain-Marie AUTOMATIC SRV GN 3/1

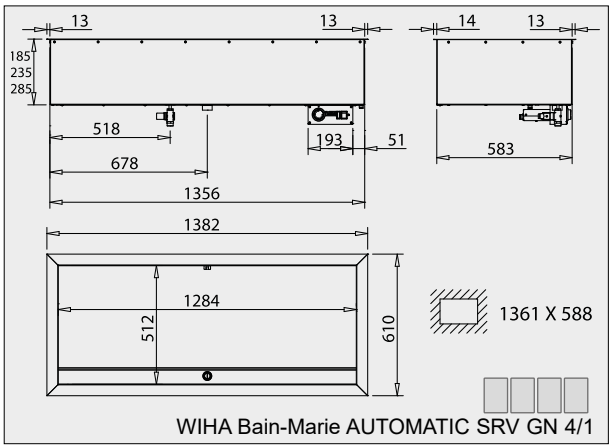

WIHA Bain-Marie AUTOMATIC SRV GN 4/1

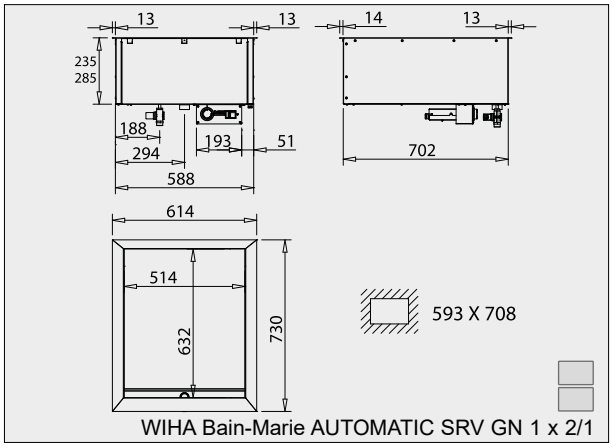

WIHA Bain-Marie AUTOMATIC SRV GN 1 x 2/1

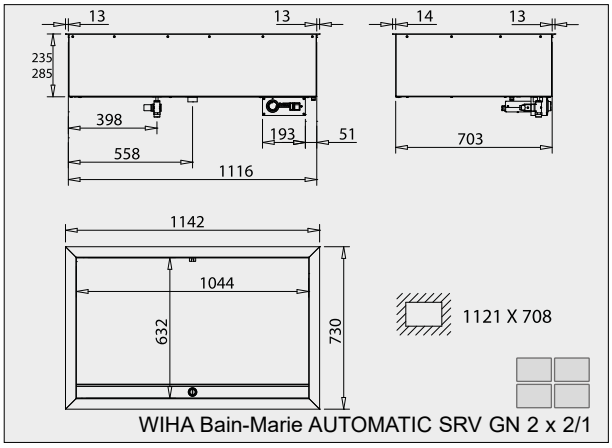

WIHA Bain-Marie AUTOMATIC SRV GN 2 x 2/1

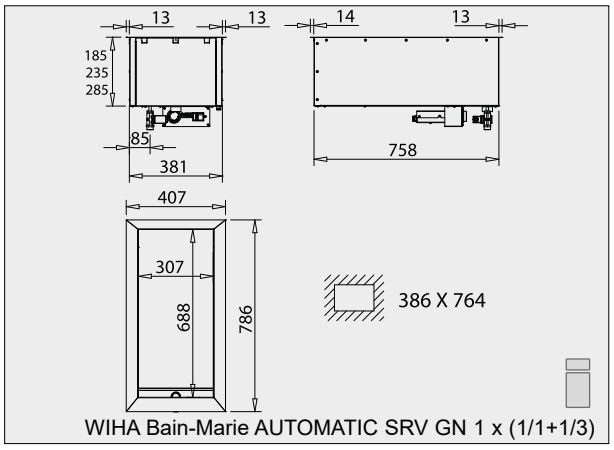

WIHA Bain-Marie AUTOMATIC SRV GN 1 x (1/1+1/3)

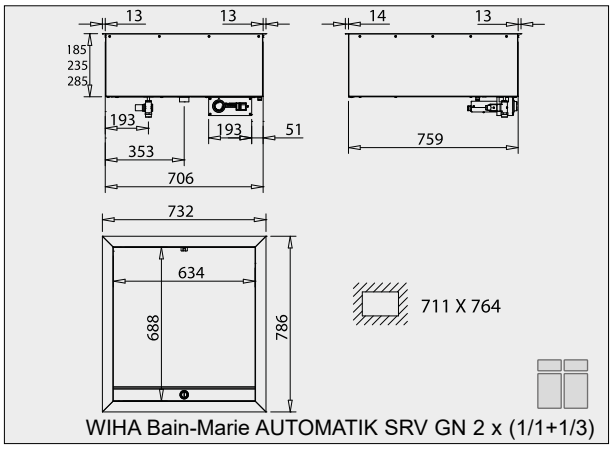

WIHA Bain-Marie AUTOMATIK SRV GN 2 x (1/1+1/3)

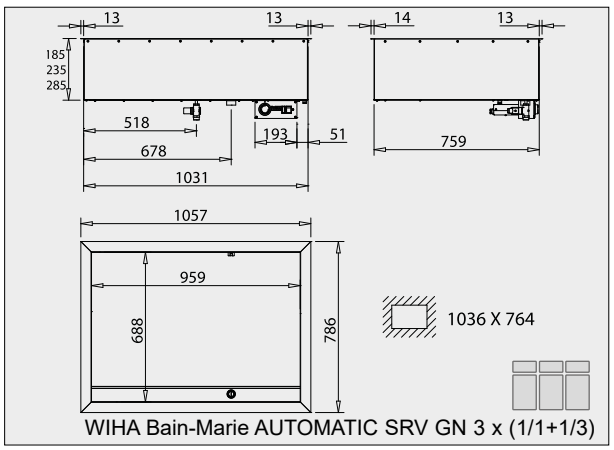

WIHA Bain-Marie AUTOMATIC SRV GN 3 x (1/1+1/3)

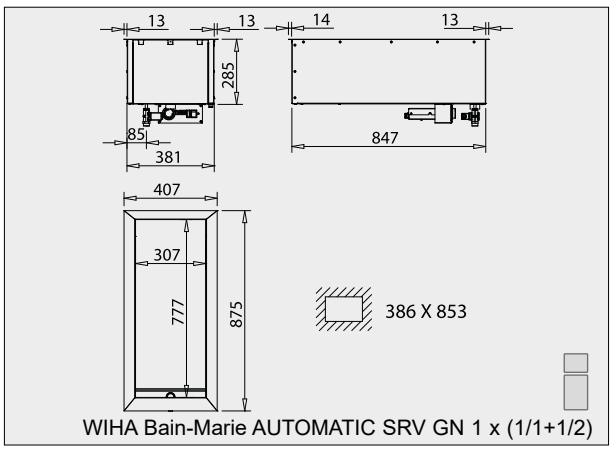

WIHA Bain-Marie AUTOMATIC SRV GN 1 x (1/1+1/2)

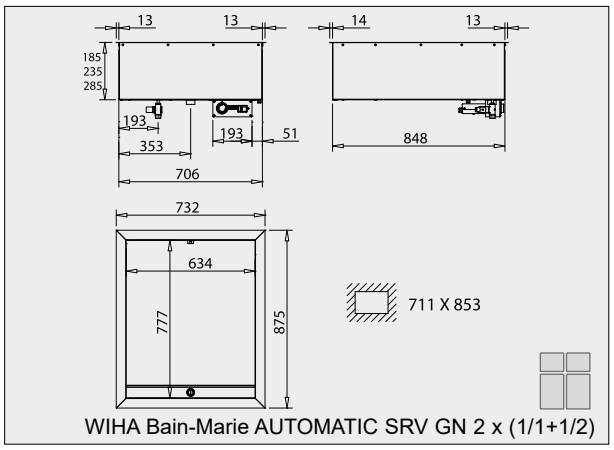

WIHA Bain-Marie AUTOMATIC SRV GN 2 x (1/1+1/2)

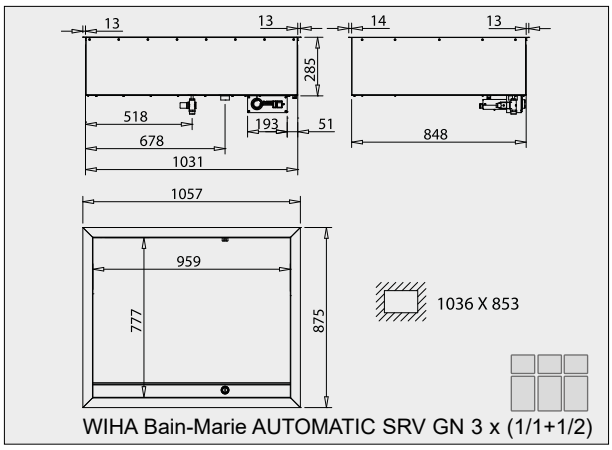

WIHA Bain-Marie AUTOMATIC SRV GN 3 x (1/1+1/2)

More drawings are available on www.wiha-web.com under “Info Centre / Customer Area”.

Merchandise Shelf for Bain-Marie

With this cover plate a smooth surface is created in the Bain-Marie to display food on dinner plates, etc. The cover plate is kept warm from the underside by water vapour.
Note: In order to keep the food warm over loner periods of time, we recommend the use of additional heat radiators.
Width: 325 mm, depth 530 mm

Art.-No.
8118

Cutting Board Polyethylene (PE)

In a Bain-Marie with the depth of 1/1 +1/2 a cutting board can be integrated for cutting for example meat loaf.
Material: Polyethylene (PE), food-safe
Dimensions: 325 mm x 265 mm x 30 mm

Art.-No.
3017

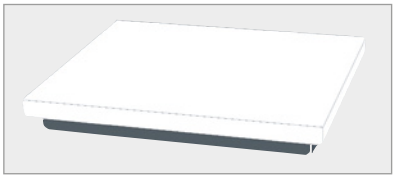

Errors and technical modification excepted. All prices are in Euro exclusive the statutory VAT. (status 05/2021)